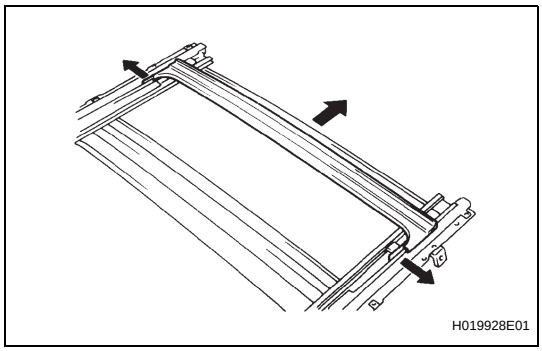

8. REMOVE ROOF DRIP CHANNEL REAR

(a) Remove the roof drip channel rear as shown in the illustration.

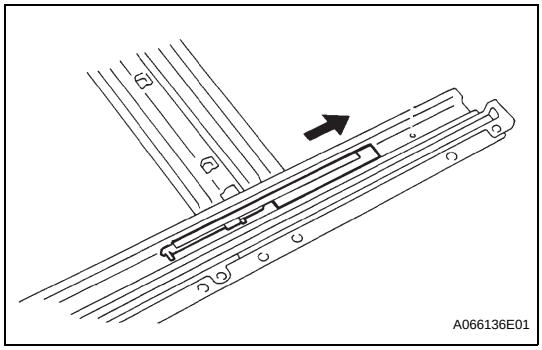

9. REMOVE SLIDING ROOF DRIVE CABLE LH

(a) Slide the drive cable backward, and remove it.

10. REMOVE SLIDING ROOF DRIVE CABLE RH

(a) Slide the drive cable backward, and remove it.

11. REMOVE ROOF WIND DEFLECTOR PANEL SUB-ASSEMBLY

(a) Remove the 2 screws and deflector panel.

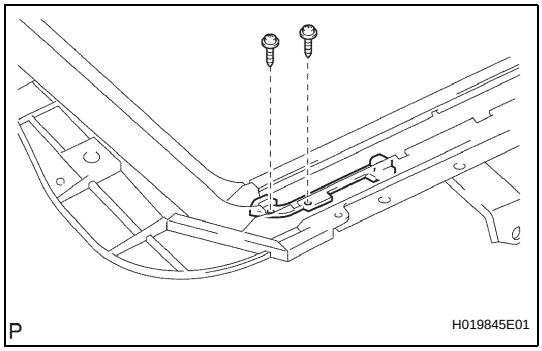

12. REMOVE SLIDING ROOF GUIDE BLOCK LH

(a) Remove the 2 screws and guide block.

13. REMOVE SLIDING ROOF GUIDE BLOCK RH

(a) Remove the 2 screws and guide block.

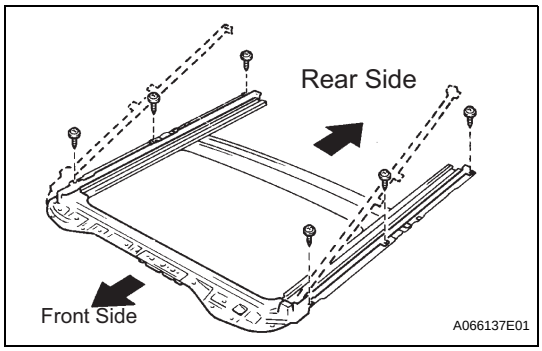

14. REMOVE SLIDING ROOF RAIL SUB-ASSEMBLY

(a) Remove the 6 screws and roof rail from the housing.

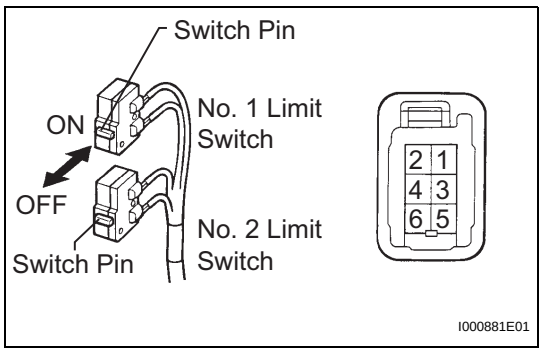

INSPECTION

1. INSPECT SLIDING ROOF LIMIT SWITCH

(a) Measure the resistance of the sliding roof switch.

Standard

Switch Position	Tester Condition	Specified Condition
No. 1 limit switch OFF (SW pin released)	4 - 5	0 V → 10 to 14 V
No. 1 limit switch ON (SW pin pushed)	4 - 5	10 kΩ or higher → Below 1 Ω
No. 2 limit switch OFF (SW pin released)	4 - 6	0 V → 10 to 14 V

Switch Position	Tester Condition	Specified Condition
No. 2 limit switch ON (SW pin pushed)	4 - 6	10 kΩ or higher → Below 1 Ω

If the result is not as specified, replace the switch.

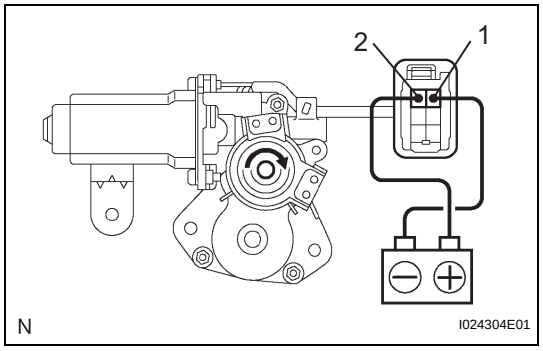

2. INSPECT SLIDING ROOF DRIVE GEAR SUB-ASSEMBLY

(a) Connect the battery's positive (+) lead to terminal 2 and the negative (-) lead to terminal 1, and check that the motor turns clockwise (moves to the close side).

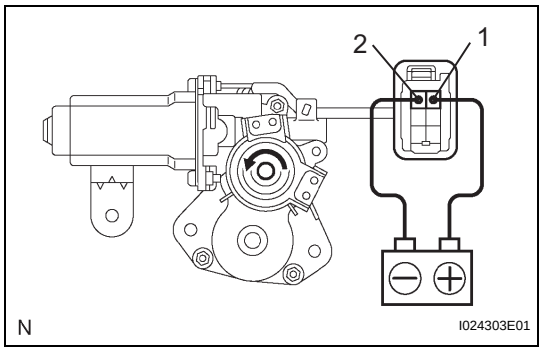

(b) Reverse the battery's leads. Check that the motor turns counterclockwise (moves to the open side). If the result is not as specified, replace the motor.

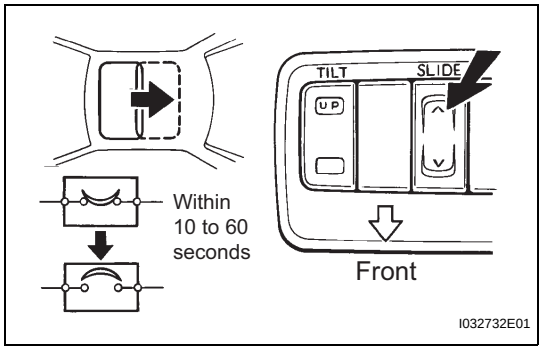

3. INSPECT SLIDING ROOF MOTOR CIRCUIT BREAKER

(a) With the sliding roof in the fully opened position, hold the sliding roof switch to the OPEN side and check that there is a circuit breaker operating noise within 10 to 60 seconds.

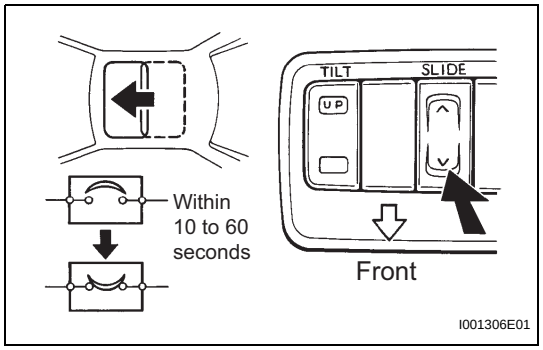

(b) With the sliding roof in the fully opened position, hold the sliding roof switch to the CLOSE side and check that the sliding roof begins to close within 60 seconds.
If the result is not as specified, replace the motor.

RF

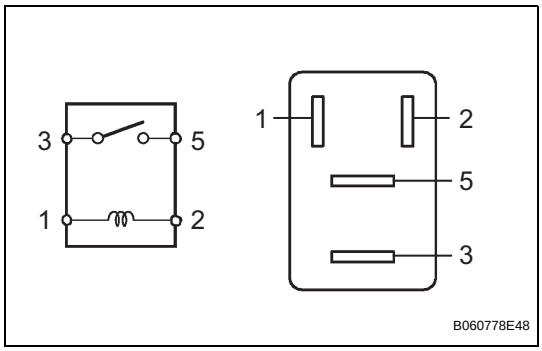

4. INSPECT RELAY

(a) Remove the power window relay from the instrument panel J/B.

(b) Measure the resistance of the relay.

Standard resistance

Tester Connection	Specified Condition
3 - 5	10 kΩ or higher
3 - 5	Below 1 Ω (when battery voltage is applied to terminals 1 and 2)

If the result is not as specified, replace the relay.